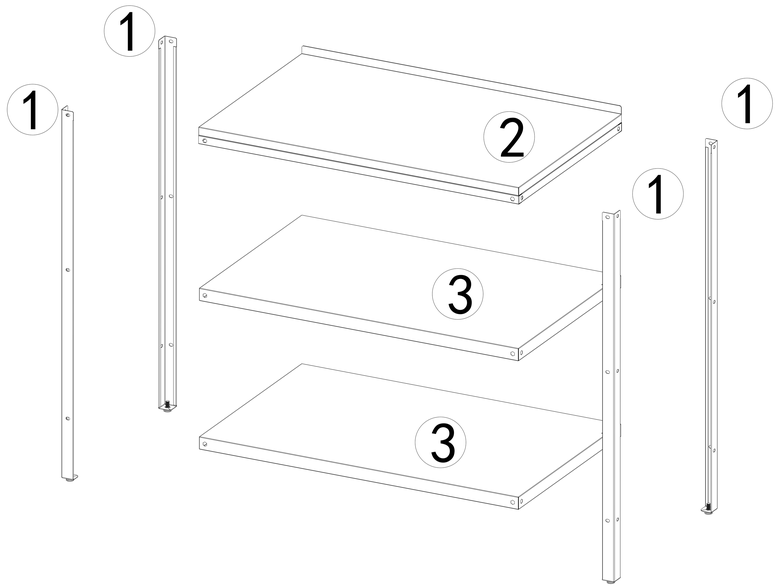

A x 24

M6 x 10

C x 4

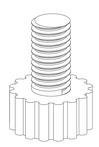

D x 1

1

4PCS

2

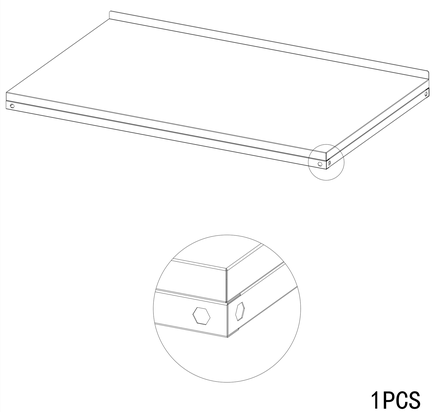

1PCS

3

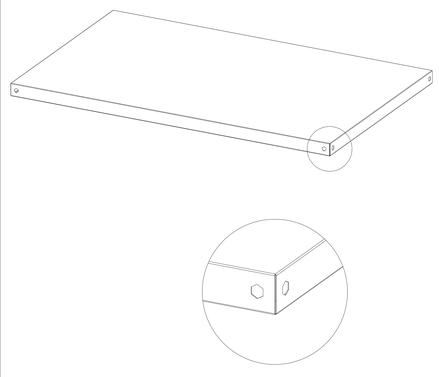

2PCS

1

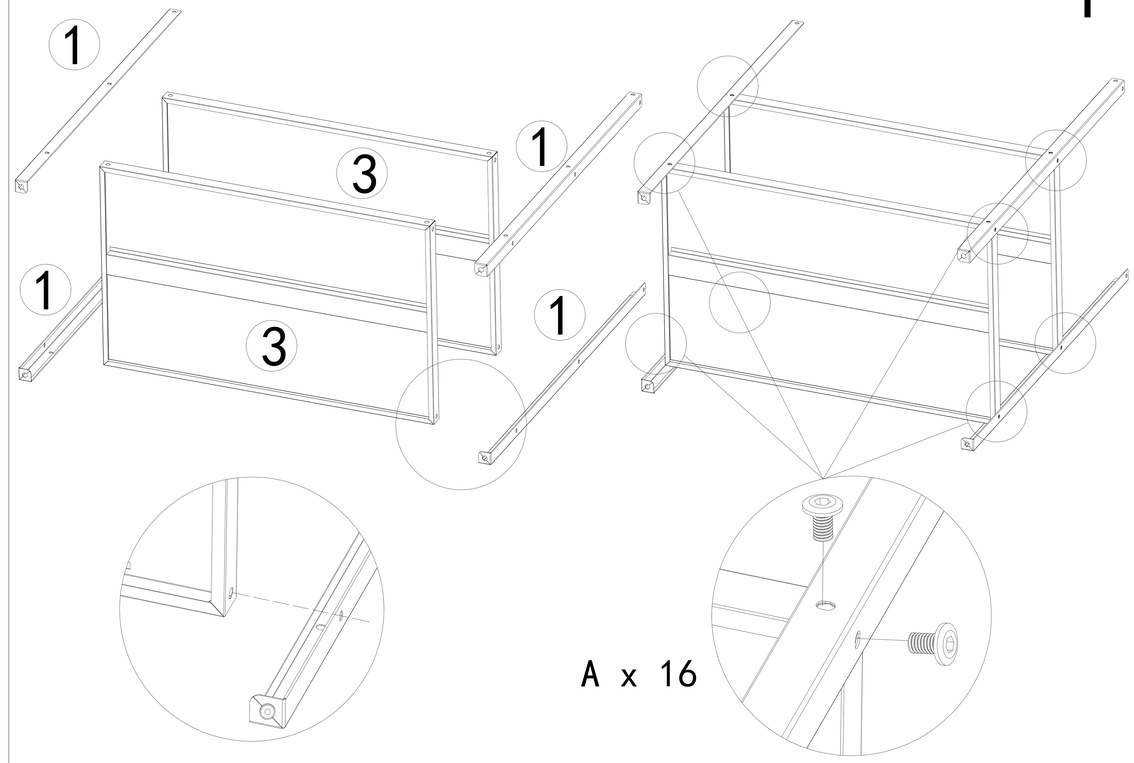

A x 16

2

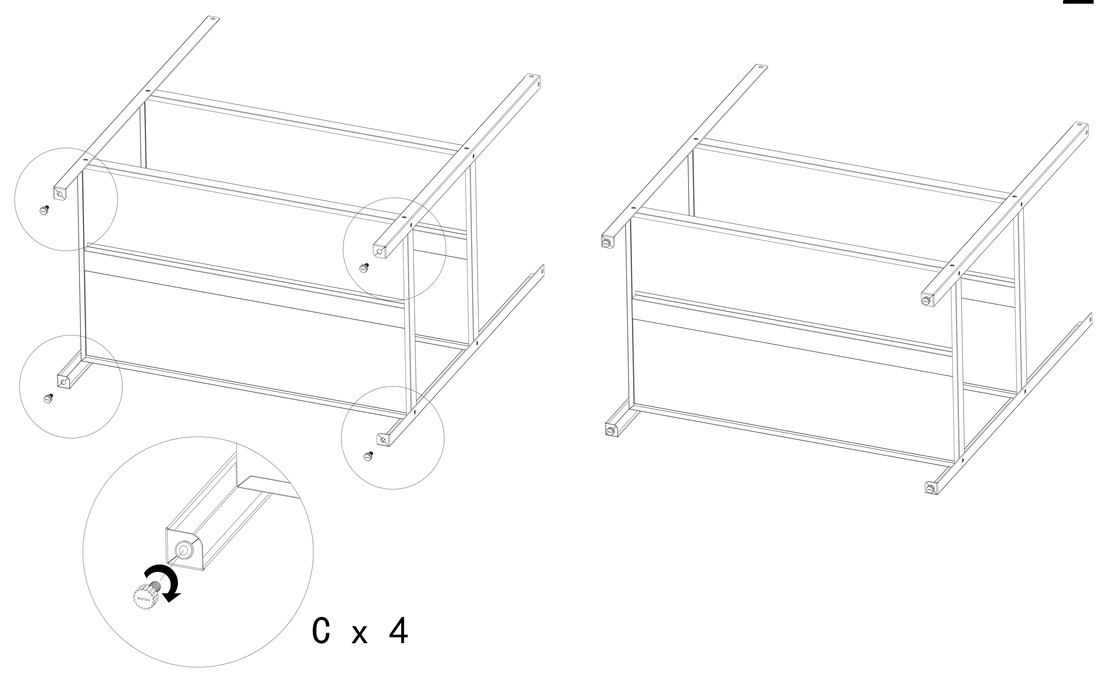

C x 4

3

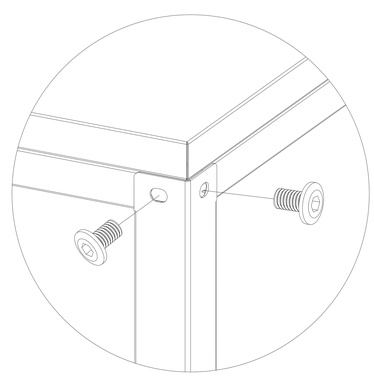

A x 8