HOBBLE

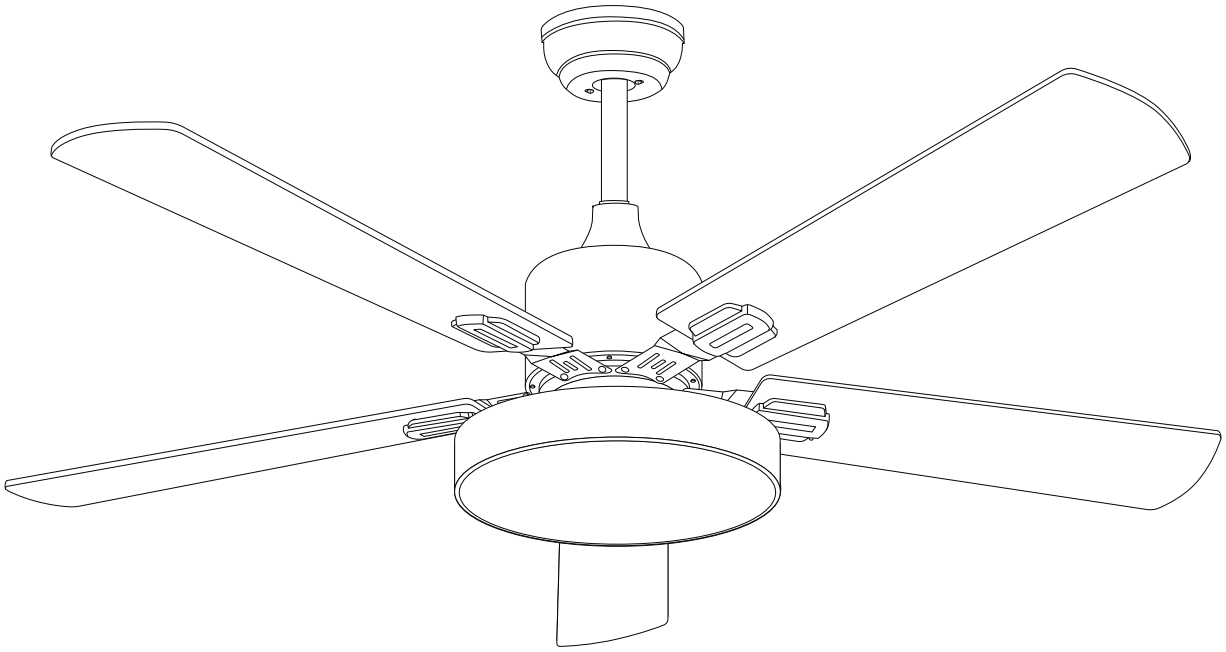

Beliani

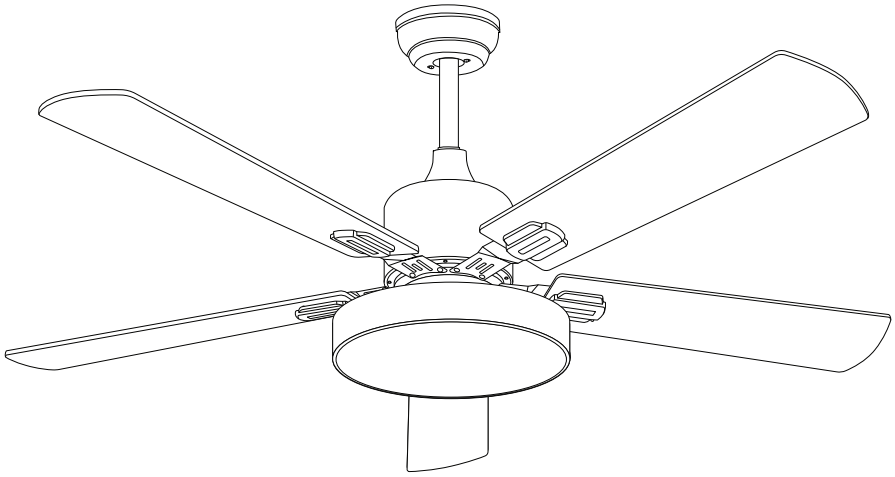

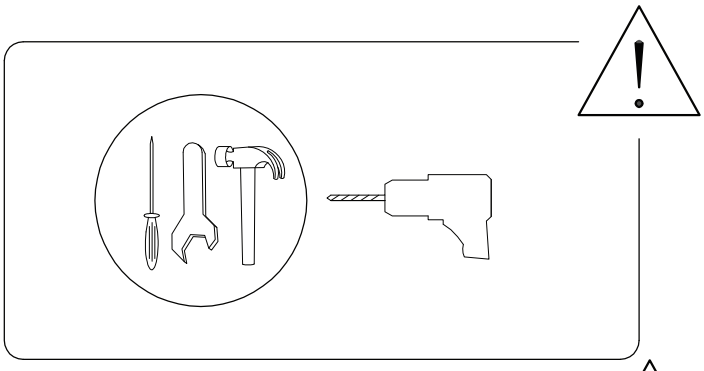

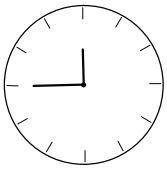

45'

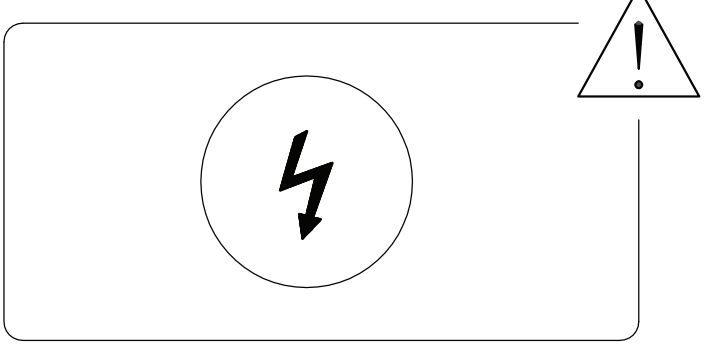

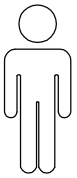

2

Beliani
1491/HOBBLE/270623/

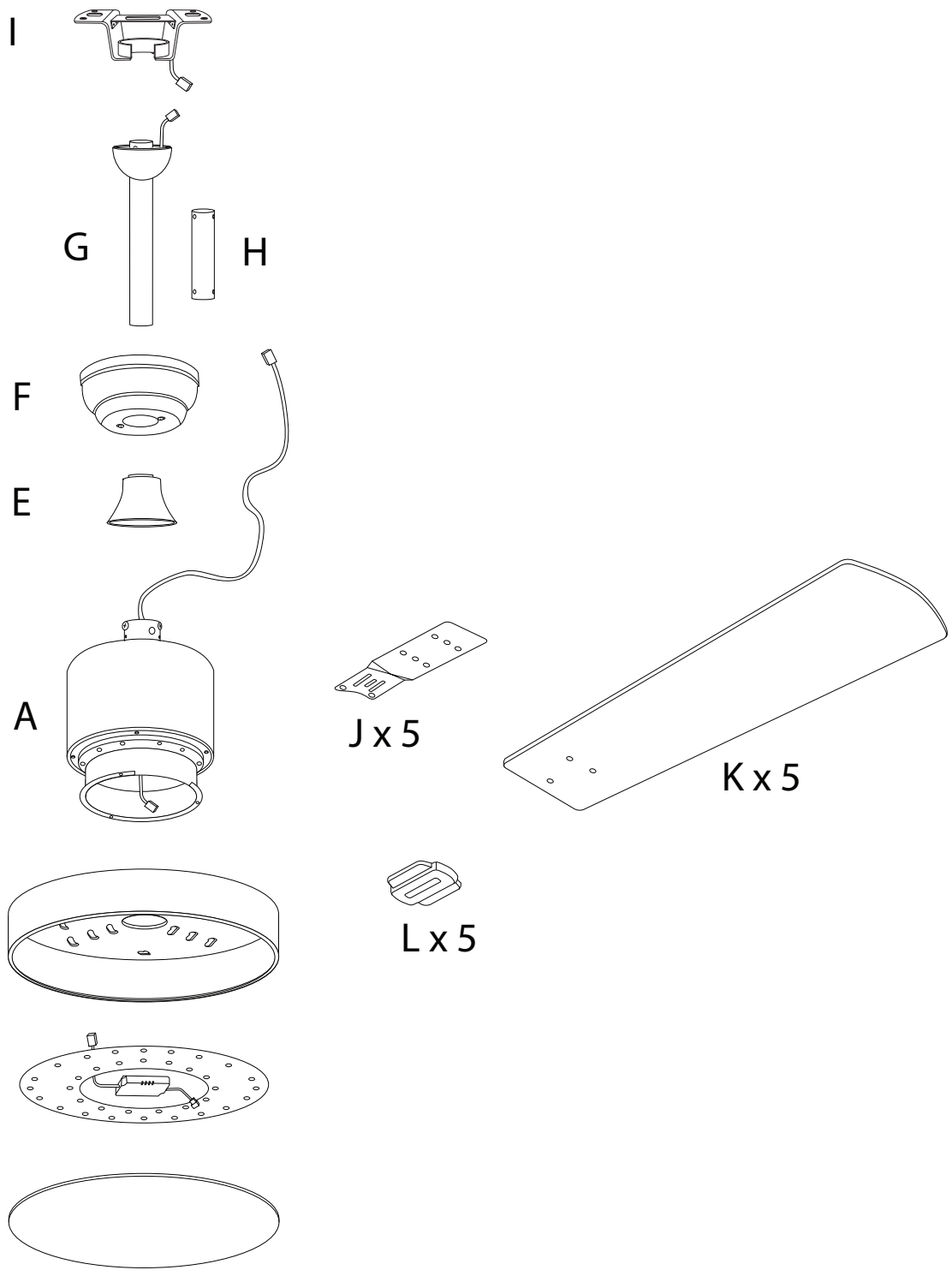

A	B	C	D
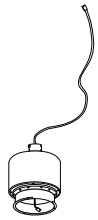	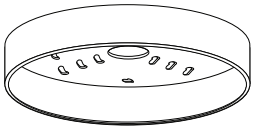	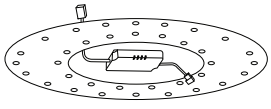	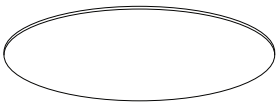
x 1	x 1	x 1	x 1

E	F	G	H
	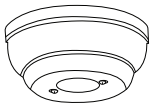	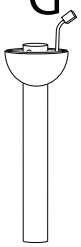	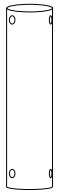
x 1	x 1	x 1	x 1

I	J	K	L
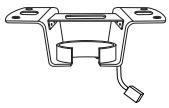	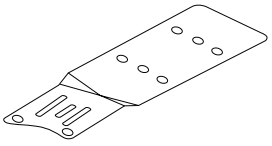	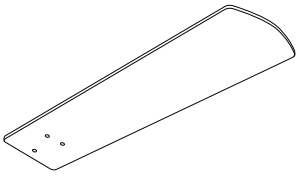	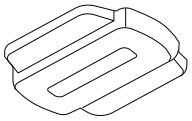
x 1	x 5	x 5	x 5

M	N	O	P
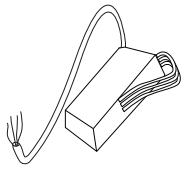	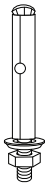		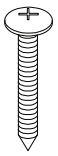
x 1	x 2	x 4	x 4

Q	R	S	T
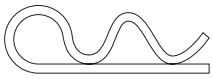		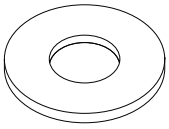	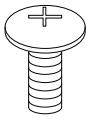
x 1	x 1	x 15	x 15

U

x 1

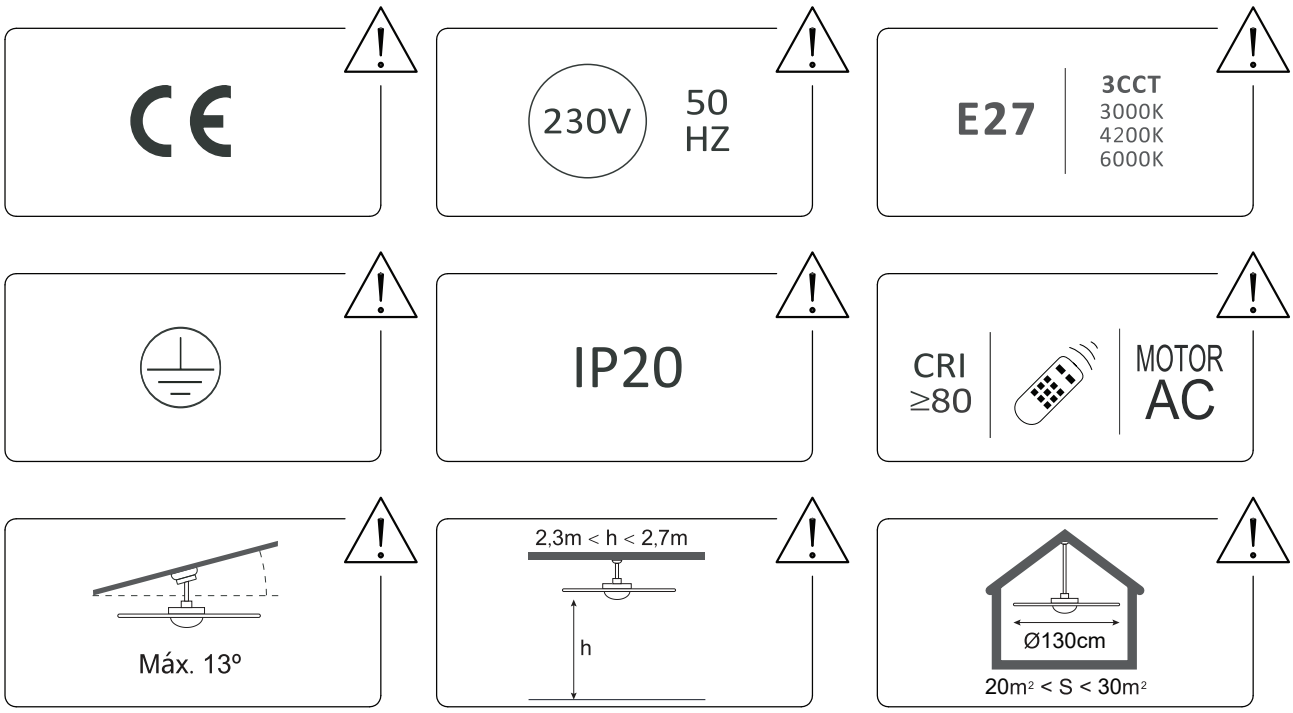
CE
230V
50
HZ
E27
3CCT
3000K
4200K
6000K
IP20
CRI
≥80
MOTOR
AC
Máx. 13º
2,3m < h < 2,7m
h
Ø130cm
20m² < S < 30m²

I	N
	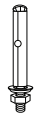
x 1	x 2

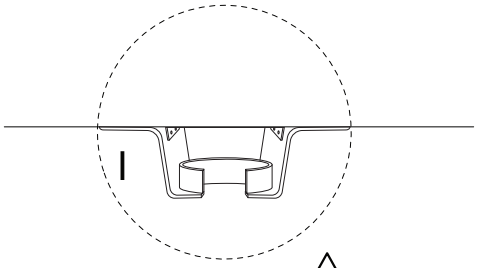

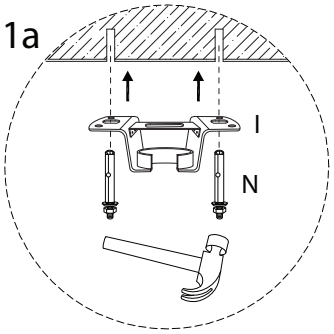

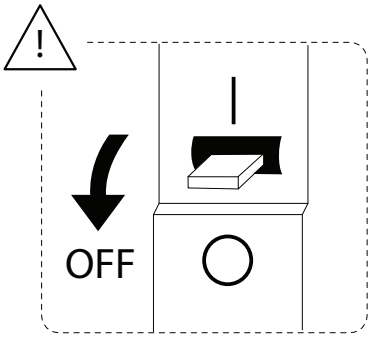

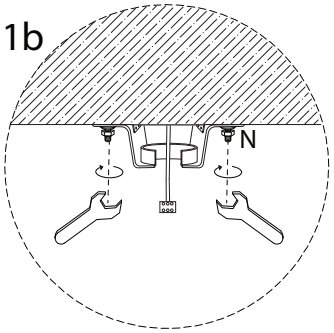

I	O	P
		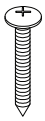
x 1	x 4	x 4

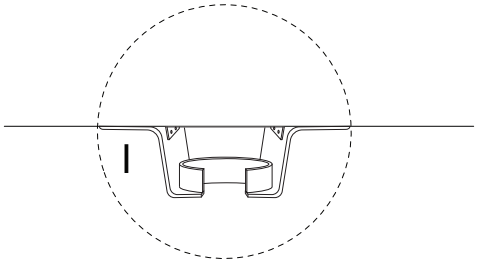

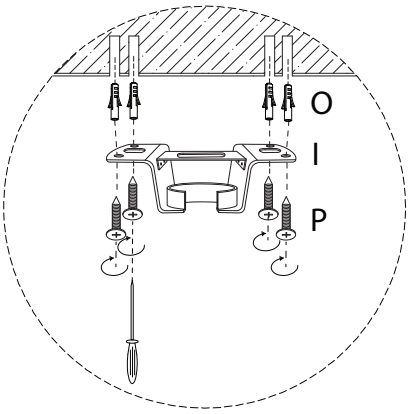

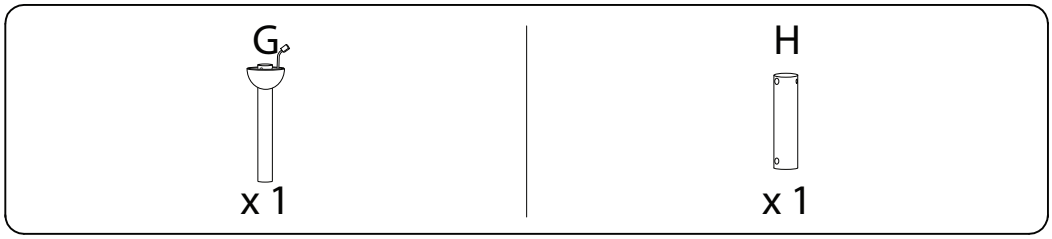

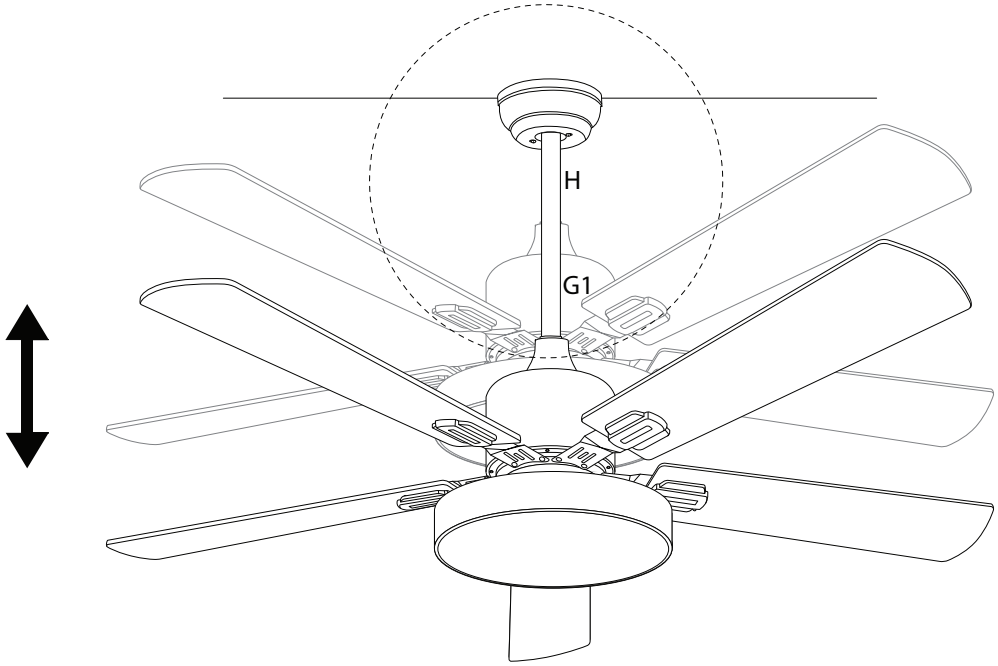

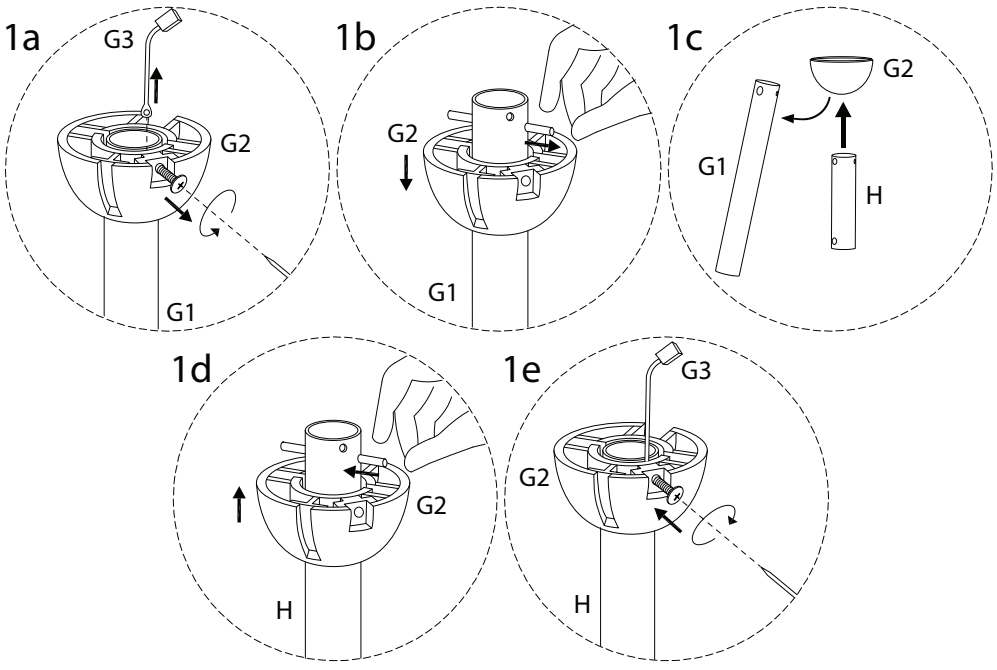

Beliani
1491/HOBBLE/270623/

1

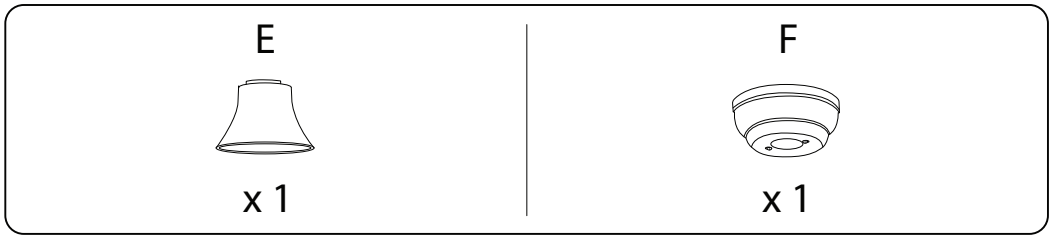

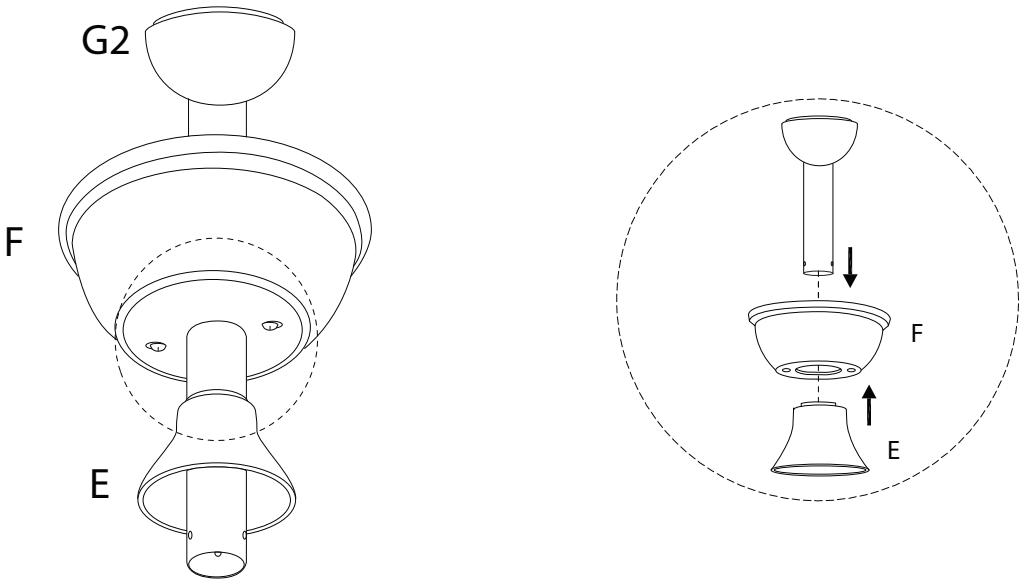

2

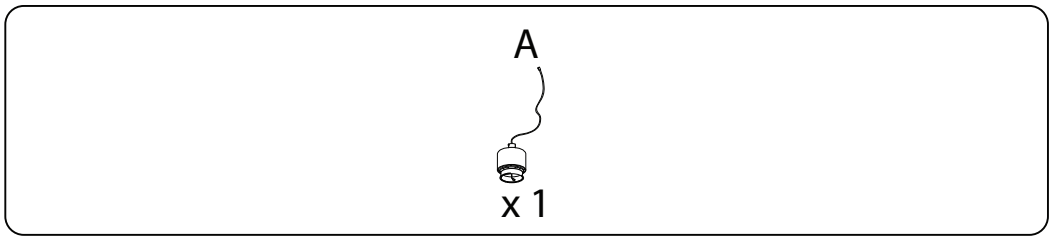

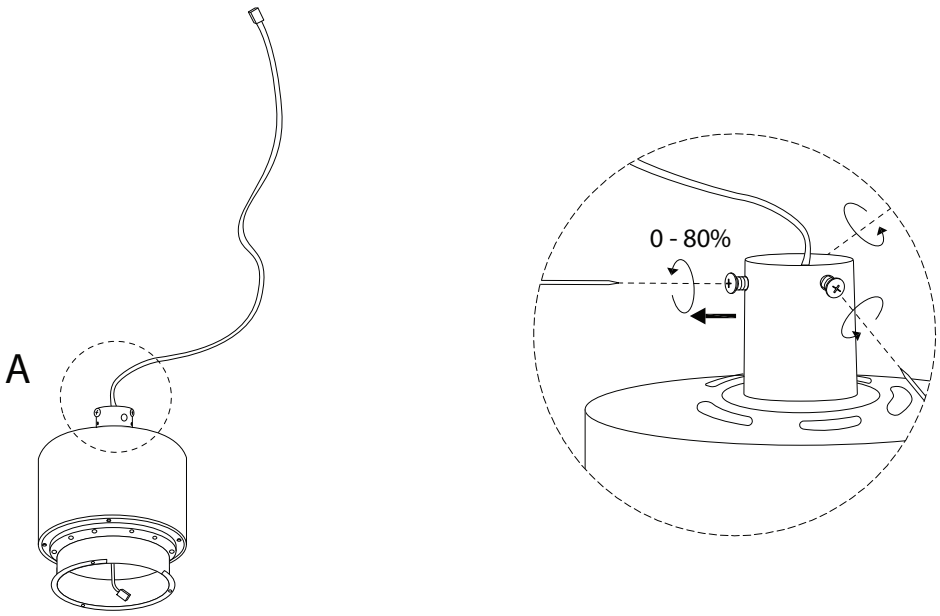

3

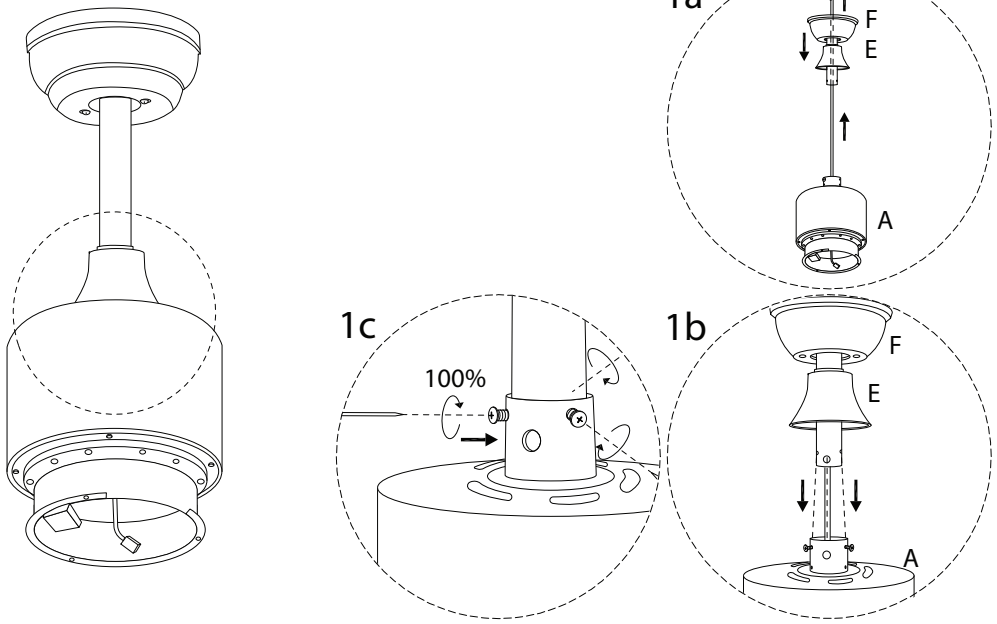

4

Q	R
x 1	x 1

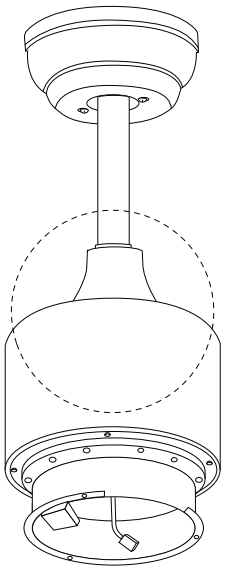

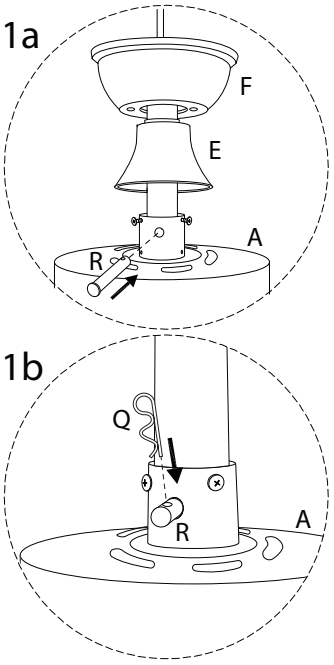

Beliani
1491/HOBBLE/270623/

5 x 5

J	K	L	S	T
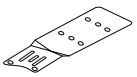	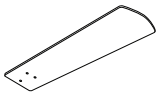	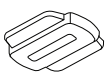	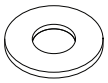	
x 1	x 1	x 1	x 3	x 3

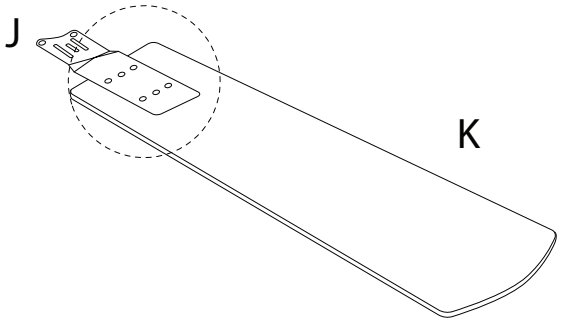

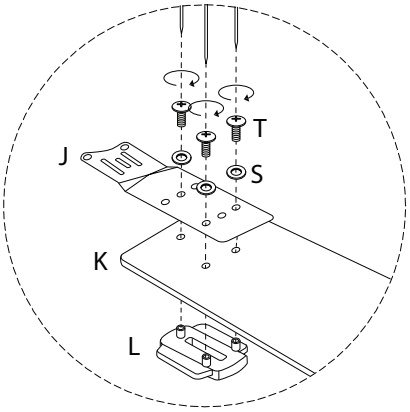

6

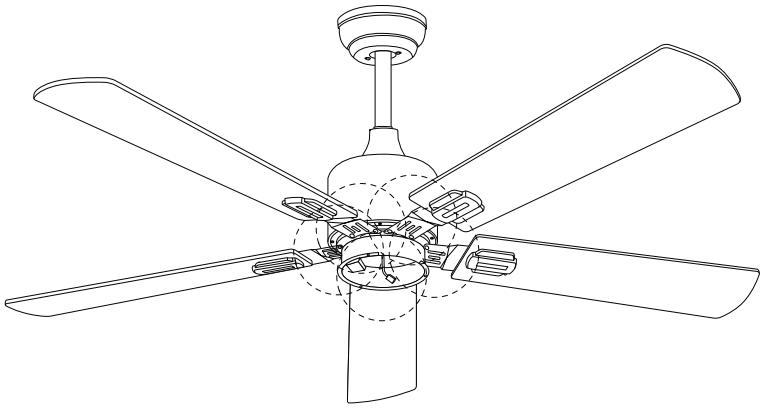

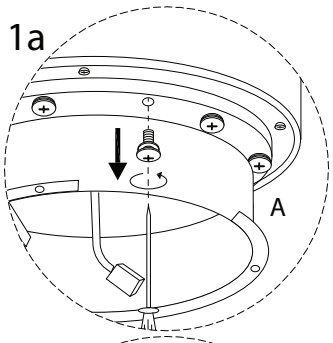

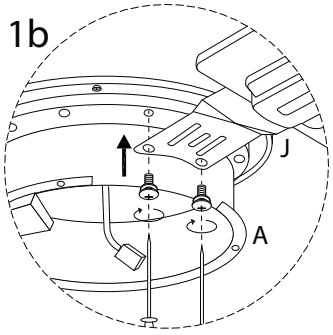

Beliani
1491/HOBBLE/270623/

7

B

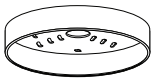

x 1

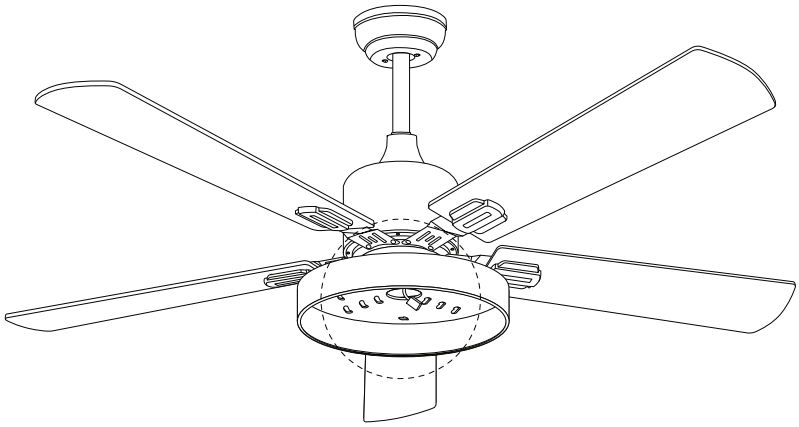

1a

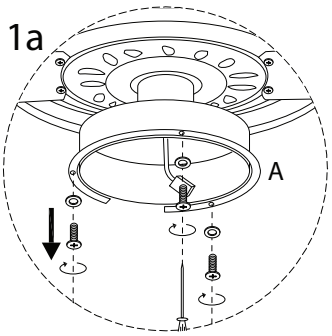

1b

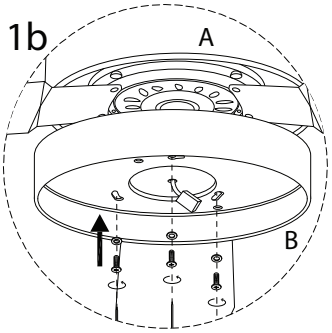

8

C

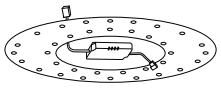

x 1

D

x 1

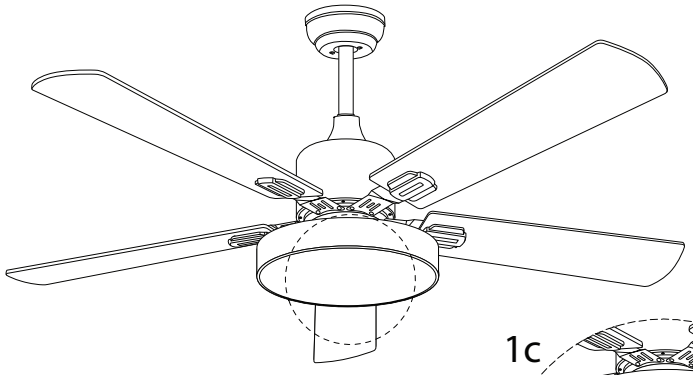

1a

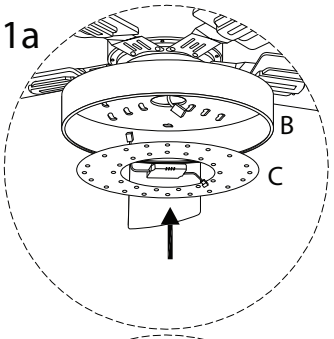

1c

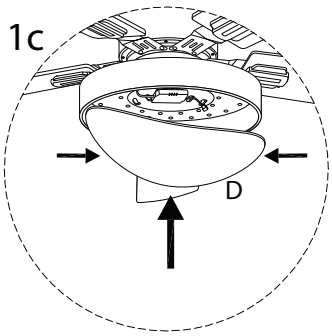

1b

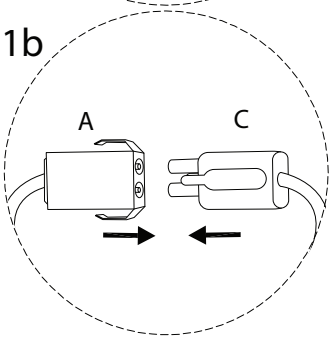

Beliani
1491/HOBBLE/270623/

9

M

x 1

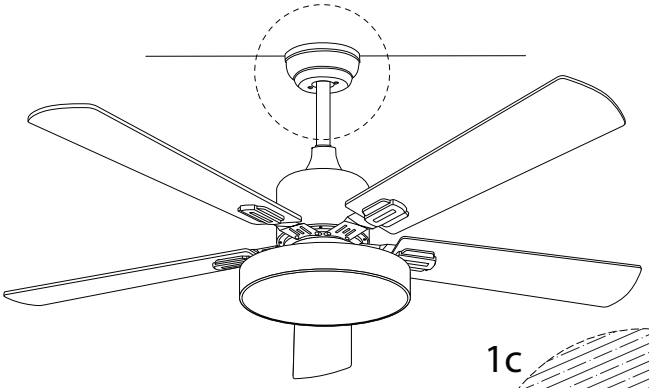

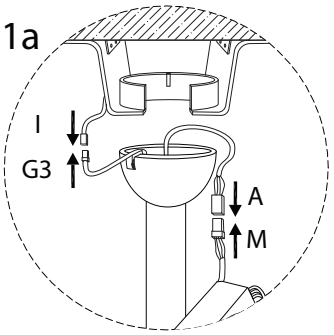

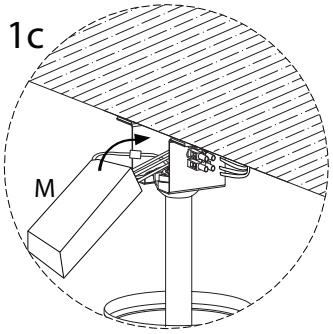

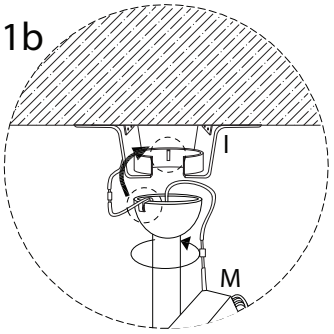

10

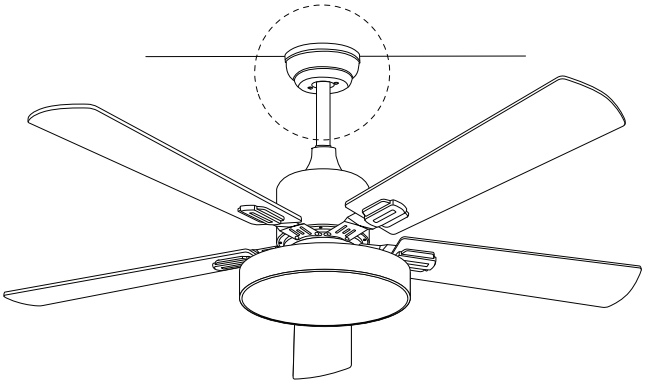

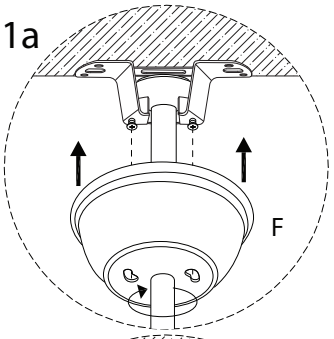

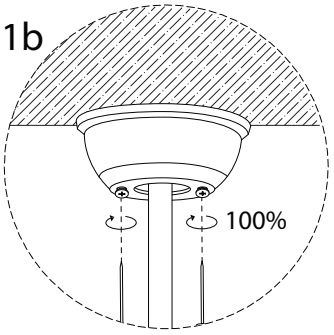

Beliani
1491/HOBBLE/270623/