Item No.: 6362

Installation manual

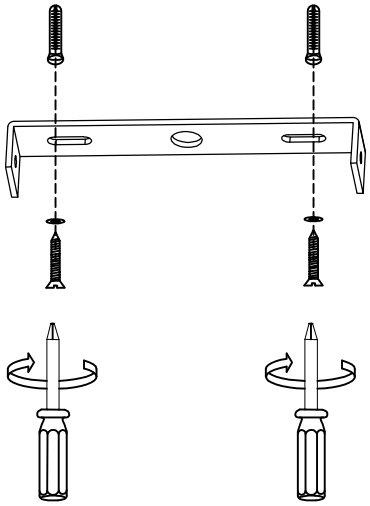

1

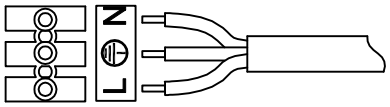

2

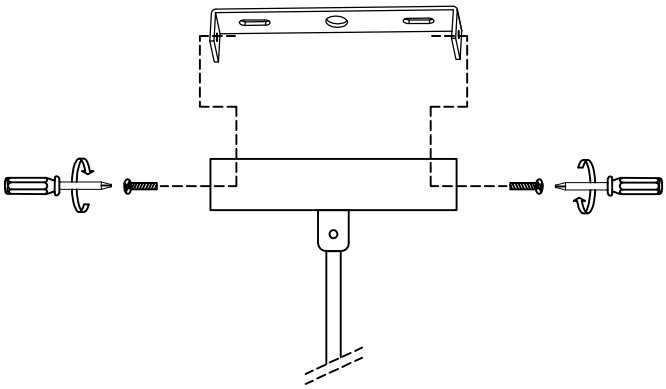

3

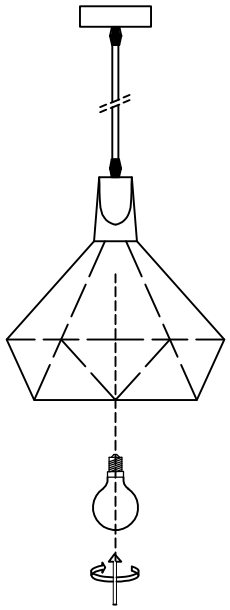
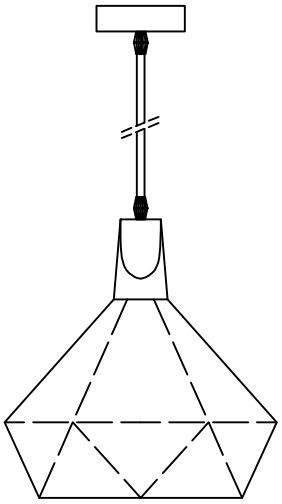
4